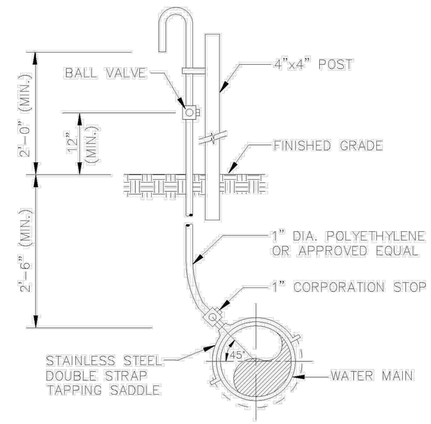

SAMPLE POINT (MAIN)

ALL D.I.P. TO BE PAINTED BLUE ON TOP HALF OF PIPE.

ENGINEERING STANDARDS 2022

REVISIONS		ENGINEERING DIVISION CITY OF POMPANO BEACH	SAMPLE POINT (MAIN)
BY	DATE		
S.S.	04-2005		DATE: MAY 2022
		SCALE: N.T.S.	DWG. NO. 100-1

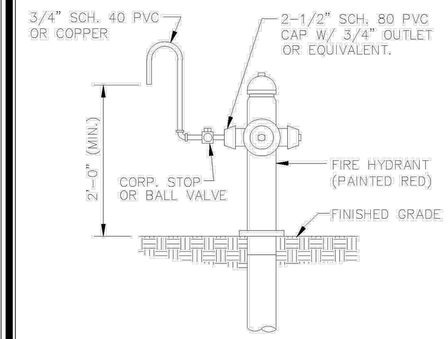

SAMPLE POINT (HYDRANT)

ALL POMPANO BEACH HYDRANTS SHALL BE PAINTED RED.

ALL D.I.P. TO BE PAINTED BLUE ON TOP HALF OF PIPE.

ENGINEERING STANDARDS 2022

REVISIONS		ENGINEERING DIVISION CITY OF POMPANO BEACH	SAMPLE POINT (HYDRANT)
BY	DATE		
S.S.	04-2005		DATE: MAY 2022
		SCALE: N.T.S.	DWG. NO. 101-1

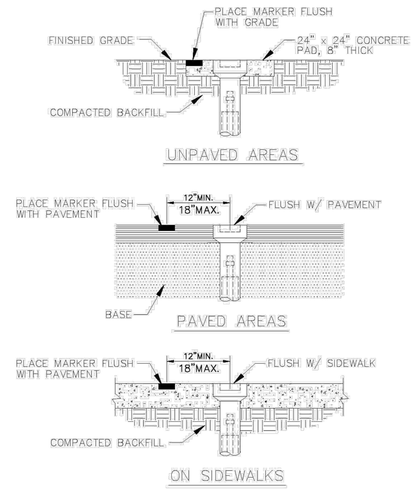

VALVE BOX SETTINGS

ENGINEERING STANDARDS 2022

REVISIONS		ENGINEERING DIVISION CITY OF POMPANO BEACH	VALVE BOX SETTINGS
BY	DATE		
S.S.	04-2005		DATE: MAY 2022
		SCALE: N.T.S.	DWG. NO. 102-1

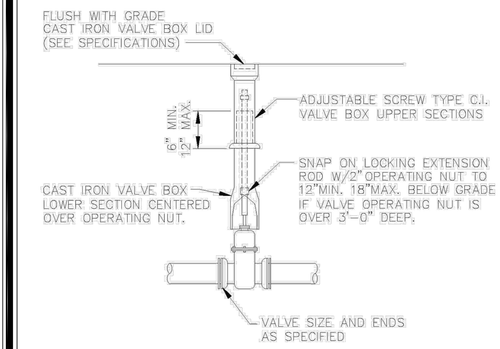

GATE OR PLUG VALVE SETTING

USE MEGALUGS AT ALL PIPE JOINTS

ALL D.I.P. TO BE PAINTED BLUE ON TOP HALF OF PIPE.

ENGINEERING STANDARDS 2022

REVISIONS		ENGINEERING DIVISION CITY OF POMPANO BEACH	GATE OR PLUG VALVE SETTINGS
BY	DATE		
S.S.	04-2005		DATE: MAY 2022
T.W.	11-2007	SCALE: N.T.S.	DWG. NO. 103-1

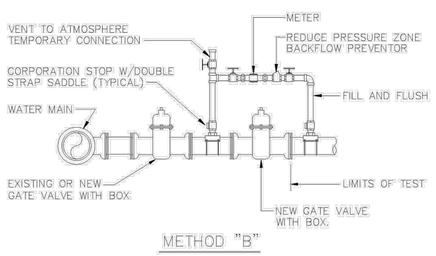

METHOD "B"

NOTES:

1. WATER MAIN TO BE PRESSURE TESTED AND DISINFECTED ACCORDING TO BROWARD COUNTY PUBLIC HEALTH UNIT REGULATIONS, AWWA, AND MUNICIPAL SPECIFICATIONS IN EFFECT.
2. BACTERIOLOGICAL TESTS ARE TO BE PERFORMED BY THE CONTRACTOR AND AN APPROVED TESTING LABORATORY.
3. REMOVE TEMPORARY CONNECTION AT SADDLE ON NEW MAINS AFTER FILLING AND FLUSHING HAS BEEN COMPLETED AND REPLACE WITH BRASS PLUG
4. PROVIDE ALL NECESSARY THRUST BLOCKS OR OTHER RESTRAINTS.
5. FILLING AND FLUSHING LOCATIONS SHALL BE COORDINATED BY THE CONTRACTOR, ENGINEER, AND CITY.
6. VENT TO ATMOSPHERE SHALL REMAIN OPEN DURING ALL PHASES OF PRESSURE TESTING.
7. AFTER COMPLETION FILL AND FLUSH CONNECTION
8. USE MEGALUGS AT ALL PIPE JOINTS

FILLING AND FLUSHING CONNECTION

ALL D.I.P. TO BE PAINTED BLUE ON TOP HALF OF PIPE.

ENGINEERING STANDARDS 2022

REVISIONS		ENGINEERING DIVISION CITY OF POMPANO BEACH	FILLING / FLUSHING CONNECTION
BY	DATE		
S.S.	04-2005		DATE: MAY 2022
T.W.	11-2007	SCALE: N.T.S.	DWG. NO. 104-1
S.S.	01-2012		

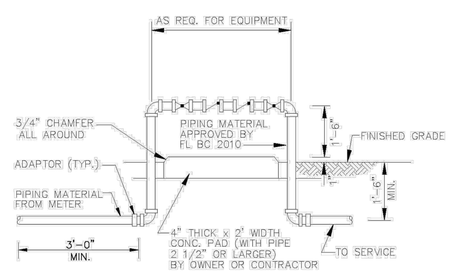

BACKFLOW PREVENTER

USE MEGALUGS AT ALL PIPE JOINTS 3" AND LARGER

PLEASE SEE METER INSTALL DIMENSION LIST ON STANDARD NO. 106-4

SMALL UNITS UNI-STRUT SUPPORT

ENGINEERING STANDARDS 2022

REVISIONS		ENGINEERING DIVISION CITY OF POMPANO BEACH	BACKFLOW PREVENTER
BY	DATE		
T.W.	04-2008		DATE: MAY 2022
S.S.	03-2009	SCALE: N.T.S.	DWG. NO. 106-1
S.S.	11-2012		
S.S.	01-2013		

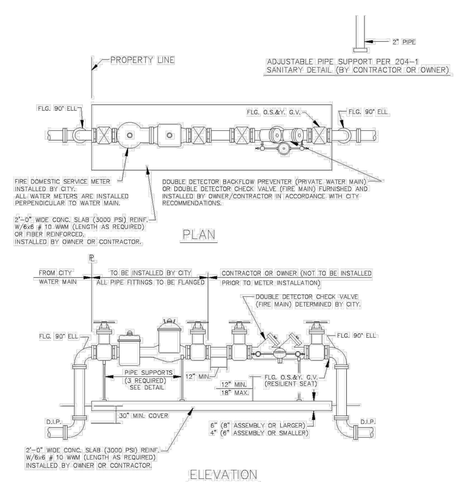

FIRE ONLY METER AND BACKFLOW DEVICE DETAILS

NOTES

1. THE BACKFLOW PREVENTOR FOR THE BY-PASS SHALL BE DDCV OR RPZ.
2. PLEASE NOTE THAT WATER METERS 3" AND LARGER ARE SUBJECT TO AN APPROXIMATE ORDER LEAD TIME OF 60 TO 75 DAYS AFTER FULL PAYMENT. PLEASE CONTACT CUSTOMER SERVICE AT 954-786-4637 TO ARRANGE FOR METER PROCUREMENT AND INSTALLATION.
3. USE MEGALUGS AT ALL PIPE JOINTS
4. PLEASE SEE METER INSTALL DIMENSION LIST ON STANDARD NO. 106-4

ENGINEERING STANDARDS 2022

REVISIONS		ENGINEERING DIVISION CITY OF POMPANO BEACH	FIRE ONLY METER AND BACKFLOW DEVICE
BY	DATE		
S.S.	05-2011		DATE: MAY 2022
S.S.	11-2012	SCALE: N.T.S.	DWG. NO. 106-3
S.S.	12-2013		
S.S.	11-2016		

FIRE METERS - OS & Y VALVES, GASKETS & METER					
(NEPTUNE MACH 10 Ultrasonic Meter)					
			METER w/ Strainer	TOTAL LENGTH	
SIZE	VALVES (2)	GASKETS (4)			
3" w/ 4" X 3" Reducer **	16"	1/2"	30" **	46 1/2"	
4"	18"	1/2"	27 1/2"	46"	
6"	21"	1/2"	33"	54 1/2"	
8"	23"	1/2"	30"	53 1/2"	
10"	26"	1/2"	41"	67 1/2"	
FIRE &/or Domestic Water SERVICE METERS - TEES, OS & Y VALVES, GASKETS & METERS					
(NEPTUNE MACH 10 Ultrasonic Meter)					
			Meter w/	TOTAL	
SIZE	TEES (2)	VALVES (2)	GASKETS (6)	Strainer	LENGTH
3" w/ 4" X 3" Reducer **	3" X 3" - 22"	16"	3/4"	30" **	68 3/4"
4"	4" X 3" - 26"	18"	3/4"	27 1/2"	72 1/4"
6"	6" X 4" - 32"	21"	3/4"	33"	86 3/4"
8"	8" X 4" - 36"	23"	3/4"	30"	89 3/4"
10"	10" X 6" - 44"	26"	3/4"	41"	111 3/4"

*All fittings, valves and meters are flanged & all dimensions are from face of flange to face of flange.

NOTE:
PLEASE NOTE THAT WATER METERS 3" AND LARGER ARE SUBJECT TO AN APPROXIMATE ORDER LEAD TIME OF 60 TO 75 BUSINESS DAYS AFTER FULL PAYMENT. PLEASE CONTACT CUSTOMER SERVICE AT 954-786-4637 TO ARRANGE FOR METER PROCUREMENT AND INSTALLATION. LARGE METERS MUST BE AT MINIMUM ORDERED PRIOR TO INITIAL INSPECTIONS.

ENGINEERING STANDARDS 2022

REVISIONS		ENGINEERING DIVISION CITY OF POMPANO BEACH	METER INSTALL DIMENSION LIST
BY	DATE		
T.W.	02-2008		DATE: JAN. 2022
S.S.	11-2016	SCALE: N.T.S.	DWG. NO. 106-4
A.S.	01-2022		

KEITH
301 East Atlantic Blvd.
Pompano Beach, FL 33060
PH: (954) 788-3400
Florida Engineering Business License: CA7928
Florida Surveyor and Mapper Business License: LB6860
Florida Landscape Architecture Business License: LC26000457

REVISIONS

NO.	DESCRIPTION	DATE

PRELIMINARY PLAN NOT FOR CONSTRUCTION

THESE PLANS ARE NOT FULLY PERMITTED AND ARE SUBJECT TO REVISIONS MADE DURING THE PERMITTING PROCESS.

RESPONSIBILITY FOR THE USE OF THESE PLANS PRIOR TO OBTAINING PERMITS FROM ALL AGENCIES HAVING JURISDICTION OVER THE PROJECT WILL FALL SOLELY UPON THE USER.

ISSUE DATE:	07/14/2022
DESIGNED BY:	JW
DRAWN BY:	FA/NW
CHECKED BY:	TD
BID-CONTRACT:	

This item has been digitally signed and sealed by Thomas F. Donahue, P.E. on the date below using a Digital Signature.

THOMAS F. DONAHUE LICENSE No. 60529 STATE OF FLORIDA PROFESSIONAL ENGINEER

Printed copies of this document are not considered signed and sealed and the signature must be verified on any electronic copies.

2022.07.13 19:23:35-04'00'
THOMAS F. DONAHUE, P.E.
FLORIDA REG. NO. 60529
(FOR THE FIRM)

CLIENT
US GATEWAY INVESTMENTS LLC

PROJECT
GATEWAY LUXURY APARTMENTS
950 N. Powerline Road
Pompano Beach, FL

SHEET TITLE
WATER AND SEWER DETAILS

SHEET NUMBER: CU-501

PROJECT NUMBER: 12697.00

STATUS: PRELIMINARY

DRC
PZ22-12000008
8/17/2022

Plotted by: fascuntar On 7/13/2022 5:07 PM

Drawing name: T:\12697.00 - Powerline Road Pompano Beach - Multi Family Residence - US Gateway Investments\Engineering\Cad\12697.00-CU-5XX.dwg